Industrial Filter Housing

PERRY EQUIPMENT CORPORATION

ISO 9001

PEACH® Triton LiquiPur®

Series 58 Liquid Filters

PECO ENGINEERED PEACH® APPLIED CONICAL

Peco

Liquid & Gas FILTRATION Environmentally Friendly

Maximum Economics and Efficiency Utilizing PEACH® Liquid Filter Elements

COURTESY OF YOUR FILTRATION ENGINEERS AT PECO

PECO SERIES 58 VESSEL product line

quality and economy, with the PEACH® advantage

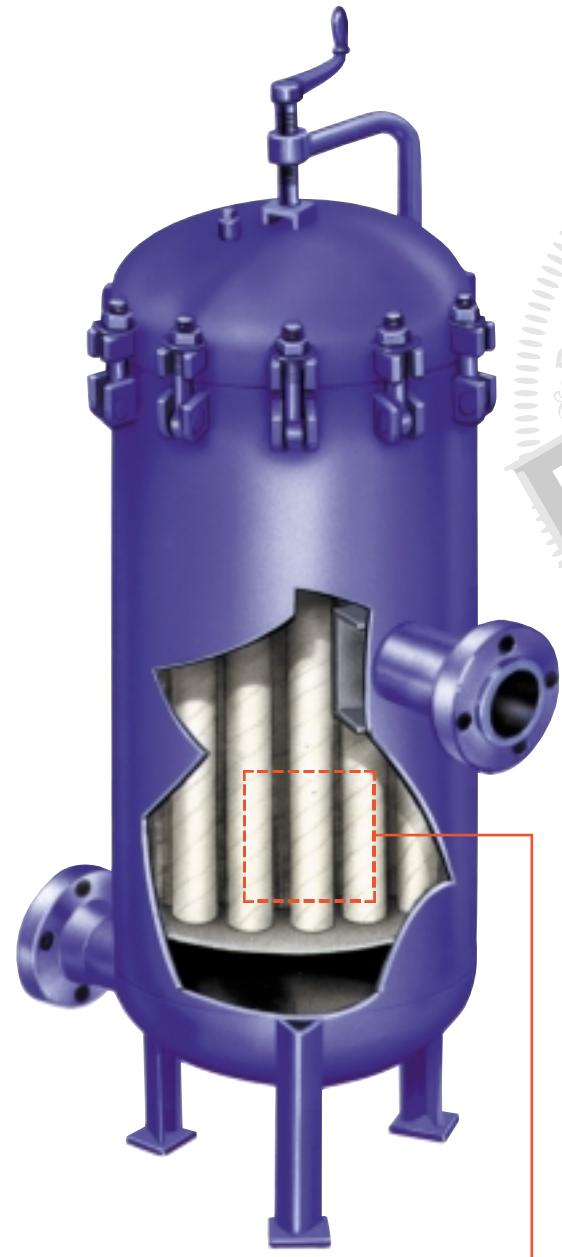

The PECO Series 58 Industrial Filter Housing has been specifically developed around all the advantages of the PECO PEACH® (Peco Engineered Applied Conical Helix) filter elements, offering increased flow rates and enhanced performance. To further enhance the economics of these filters, PECO conducted exhaustive tests to determine the optimal filter element dimensions based on flow rates and dirt holding capacities. The result is the PECO 347 filter element.

These elements, along with a newly redesigned element support system, result in the most economical vessel design and operational costs available today.

PEACH® Triton LiquiPur®, a complete filter product line wrapped around the PEACH® advantage

FEATURES

- ***Heavy Gauge Steel Construction*** fulfills all of the basic requirements for general industrial filtration applications.
- ***ASME Code Design*** and construction means compliance with ASME Code, Section VIII, Div. I standards for safety and quality. Vessels with code stamp are available upon request.
- ***Swing Bolt Closure*** allows quick element change outs and access to vessel internals.
- ***Tube Sheet and Bottom Drains*** completely drain the vessel for inspection, cleaning, and element change outs.
- ***Flange Inlet/Outlet Connections*** conform to industry standard ASME/ANSI B16.5 piping connections while maintaining maximum safety standards.
- ***Clean and Dirty Side Differential Pressure Gauge Ports*** are included on both sides of the tube sheet. This allows more accurate differential pressure measurement and reduces the time required to record performance readings.
- ***Leg Supports*** support the vessel while reducing the mounting footprint and overall unit weight.
- ***OSHA Combustible Liquids Requirements*** meets or exceeds requirements for containment of Class I, II, III combustible liquids (less than 200˚F flash point.)
- ***Complete Size Range*** consisting of 13 Models in shell diameters from 10 inches to 36 inches.

ORDERING

For information on replacement elements, please refer to brochure EL-PCHL-SL-01 or EL-P90-SL-01.

58	12	347	285	16	
Series Number	Number of Elements	Element Type (3.0" outer diameter by 47" length)	Design Pressure (psig) 285-CS 275-304 SS	Nominal Shell Diameter (Inches)	Blank=CS, 4S=304SS, 4LS=304LSS 6S=316SS, 6LS=316LSS

SPECIFICATIONS

Standard Materials of Construction

- Wetted parts:
  carbon steel, or 304 stainless steel
- Non-wetted parts:
  carbon steel
- Gaskets:
  Square Buna-N (Other materials available upon request.)
- Cover Lifting Device:
  - Lifting handles on 20" and smaller
  - Davit on 22" and larger
- Vent:
  top of closure
- Differential Pressure Ports:
  above and below tube sheet
- Standard Design Pressures:
  - 285 psig @ 100˚F (Carbon Steel)
  - 275 psig @ 100˚F (304 Stainless)
- Vessel Support:
  side mounted angle legs
- Hydrotest:
  15 minutes @ 1.5 times design pressure
- Finish:
  - Carbon steel - brush off blast, one coat shop primer
  - Stainless steel - brush off blast, shop primer on carbon steel components
- Corrosion Allowance:
  not available
- Standard Element Configuration:
  accommodates PEACH 347 Elements 3" diameter by 47" long / single open end with integral top spring. (ELEMENTS SOLD SEPARATELY.)
- Lifting Lugs

Options

- ASME Code Stamp:
  Section VIII Div. I
- Vessel Support:
  skirt
- Closure:
  - Quick opening closure with davit
  - Blind flange top cover
- Non-destructive Test (NDT) Options:
  - Radiography
  - Magnetic Particle Examination
  - Liquid Penetration Examination
  - Ultrasonic Examination
- Materials:
  304L, 316, 316L Stainless Steel
- Coating Options:
  - Sandblast: commercial, near white and white
  - Paint: 2&3 coat, corrosion resistant coating
- Custom Nozzle Orientations

Nominal Dimensions in Inches / (mm)

MODEL	SHELL DIA.	INLET OUTLET	A	B	C	D	F	H	J
58-6-347-10-285	10 3/4 (273) O.D.	4 (101)	76 3/16 (1935)	24 (610)	53 (1346)	5 1/2 (140)	8 7/8 (225)	11 1/4 (286)	6 1/2 (165)
58-7-347-12-285	12 3/4 (324) O.D.	4 (101)	76 3/16 (1935)	24 (610)	53 (1346)	5 1/2 (140)	10 7/8 (276)	12 1/4 (311)	6 1/2 (165)
58-8-347-14-285	14 (356) O.D.	4 (101)	76 3/16 (1935)	24 (610)	53 (1346)	5 1/2 (140)	12 1/8 (308)	13 1/4 (336)	7 3/4 (197)
58-12-347-16-285	16 (406) O.D.	6 (152)	77 11/16 (1973)	24 (610)	54 (1372)	6 (152)	14 1/4 (362)	14 1/4 (362)	8 1/4 (209)
58-16-347-18-285	18 (457) O.D.	6 (152)	77 11/16 (1973)	24 (610)	54 (1372)	6 (152)	16 1/4 (413)	15 1/4 (387)	9 (229)
58-21-347-20-285	20 (508) O.D.	8 (203)	80 11/16 (1973)	24 (610)	54 (1372)	7 (178)	18 1/4 (463)	16 1/4 (413)	9 1/4 (235)
58-28-347-22-285	22 (559) O.D.	8 (203)	79 15/16 (2030)	27 (686)	57 (1448)	7 (178)	20 1/4 (514)	17 1/4 (438)	21 (533)
58-33-347-24-285	24 (610) O.D.	8 (203)	85 15/16 (2183)	33 (838)	63 (1600)	7 (178)	22 1/4 (565)	20 (508)	22 (559)
58-43-347-28-285	28 (711) O.D.	10 (254)	88 3/16 (2240)	35 (889)	66 (1676)	8 (203)	26 1/4 (667)	22 (559)	23 (584)
58-52-347-30-285	30 (762) O.D.	10 (254)	88 3/16 (2240)	35 (889)	66 (1676)	8 (203)	28 1/4 (717)	23 (584)	24 (610)
58-56-347-32-285	32 (813) O.D.	12 (304)	91 15/16 (2335)	37 (940)	69 (1753)	9 (229)	30 1/4 (768)	24 (610)	25 (635)
58-66-347-34-285	34 (864) O.D.	12 (304)	91 15/16 (2335)	37 (940)	69 (1753)	9 (229)	32 1/4 (819)	25 (635)	25 (635)
58-78-347-36-285	36 (914) O.D.	12 (304)	91 15/16 (2335)	37 (940)	69 (1753)	9 (229)	34 1/4 (870)	26 (660)	26 (660)

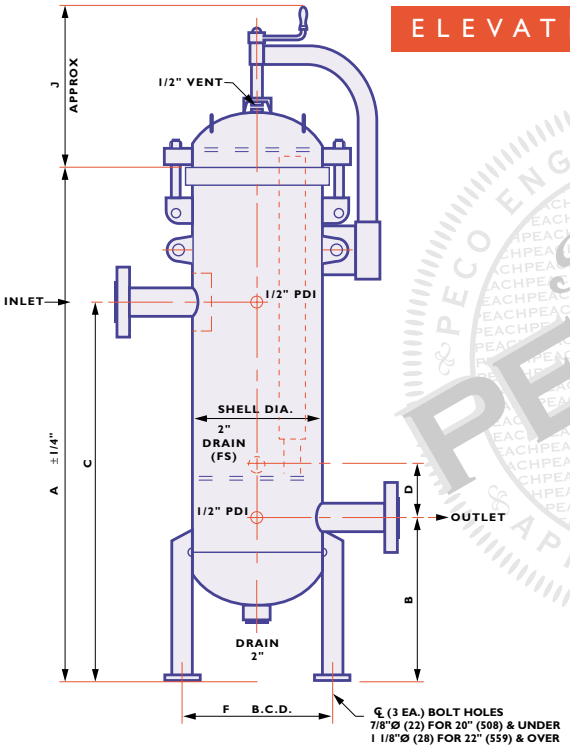

Notes:

1. Davits are included on 22" (559) diameter vessels and larger.
2. Lifting handles included on 20" (508) diameter vessels and smaller.

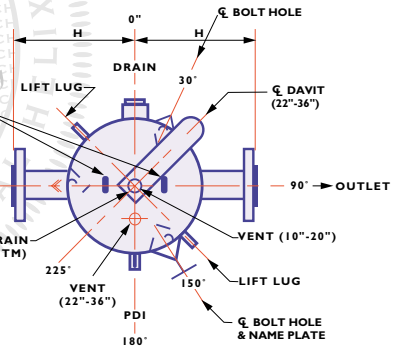

TRUE ORIENTATION

Your local distributor:

e-mail:
fs@pecousa.com

web site:
pecousa.com